1/8-DIN DUAL COLOUR DISPLAY TEMPERATURE INDICATOR CONCISE PRODUCT MANUAL (59230-2)

OPERATING MODE

NOTE: Set all Configuration Mode and Program Mode parameters before starting normal operations.

Front Panel



Key/Display/Indicator	Function
Down key (▼)	In Edit Mode, decrements the flashing digit in the Primary Display.
Scroll key (➤)	Puts Indicator into Edit Mode; in Edit Mode, selects digit to be altered (selected digit is flashing) in Primary Display. Wrap-around occurs from right-most digit to left-most digit.
Program Key (**PGM**)	Selects parameter to be viewed/edited. In Edit Mode, confirms changed parameter value.
Reset key (**RST**)	If the process variable is displayed, resets the latched Alarm 1. If the Maximum (High) Value, Minimum (Low) Value or Alarm 1 Elapsed Time is displayed, resets the displayed parameter.
Down (▼) and Scroll (➤) keys	If pressed simultaneously in Edit Mode, will abort the Edit operation and will restore the parameter to its initial value.
Primary Display	Normally displays the process variable value. Displays other Operation Mode parameters when the Program (**PGM**) key is used. If the Help Facility is enabled (see Subsection), this display shows the parameter description for three seconds before displaying the parameter value.
Secondary Display	Shows a single-character identifier for the parameter value being displayed (blank for process variable).
OP1 indicator	ON when Alarm 1 is active.
OP2 indicator	ON when Alarm 2 is active.

Parameter Sequence

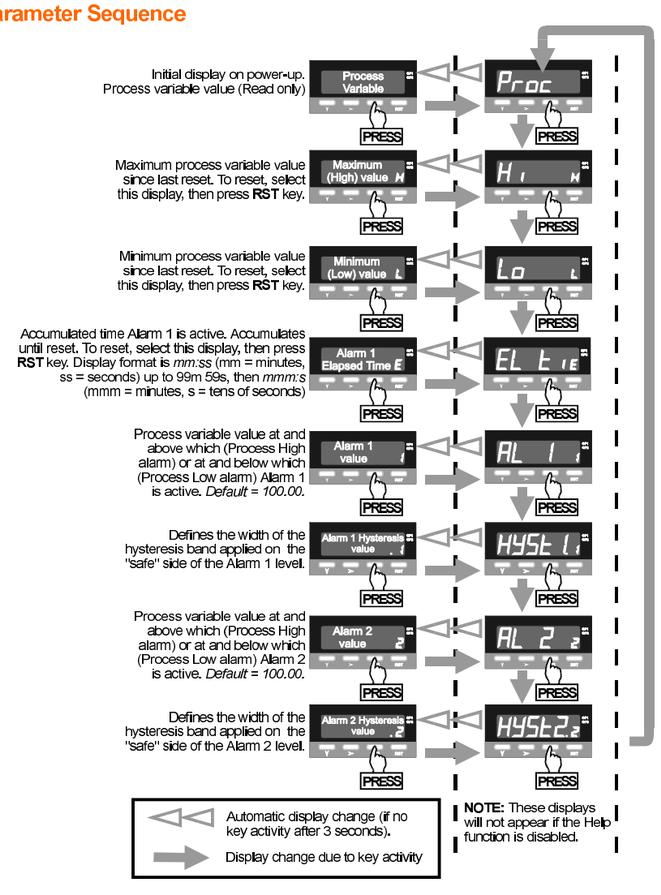

Error/Fault Indication

OuEr	UndEr	brEAK
Process Variable Over-Range Process variable is greater than the input maximum full scale value	**Process Variable Under-Range** Process variable is less than the input minimum full scale value	**Sensor Break** Unit has not received an input signal for two seconds.

NOTE: The process variable must be more than 5% over-range/under-range for the appropriate display to appear.

Alarms

⚠ NOTE: Alarm values cannot be changed if Alarm Lock is enabled (see PROGRAM MODE).

PROGRAM MODE

Changing an Alarm Value

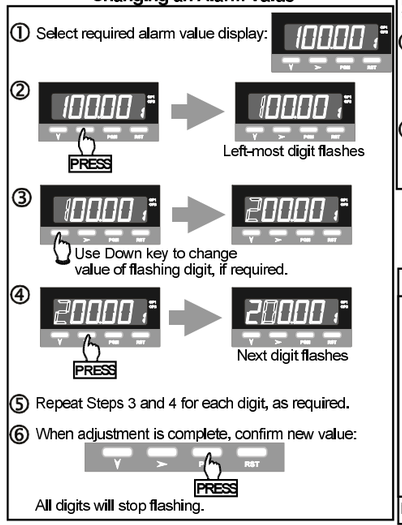

Resetting a Latched Alarm

If Alarm 1 is configured to be a latched alarm relay, when it is active, it may be reset as follows:

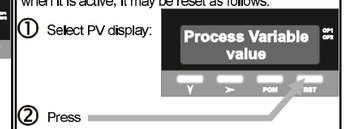

NOTE: The latched alarm cannot be reset whilst the alarm condition persists.

Alarm Hysteresis Operation

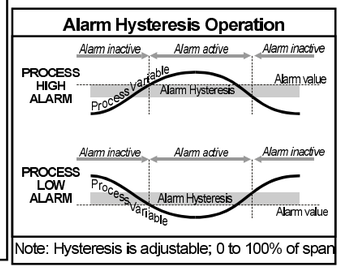

Note: Hysteresis is adjustable; 0 to 100% of span

To enter Program Mode from Operator Mode:



NOTE: In Program Mode, the secondary display flashes continuously and shows a single-character which identifies the displayed parameter.

HOLD DOWN FOR 3 SECONDS *Use the same key action to return to Operator Mode*

Parameter Selection (Help Facility Enabled)

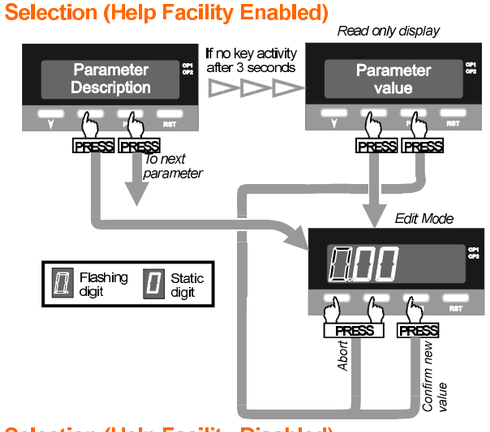

Parameter Selection (Help Facility Disabled)

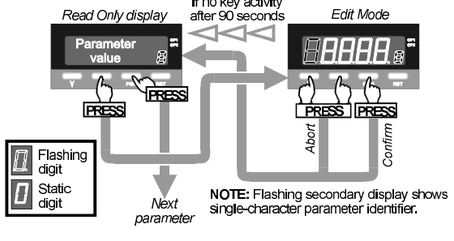

Editing the Displayed Parameter (Edit Mode)

① Select required parameter display.

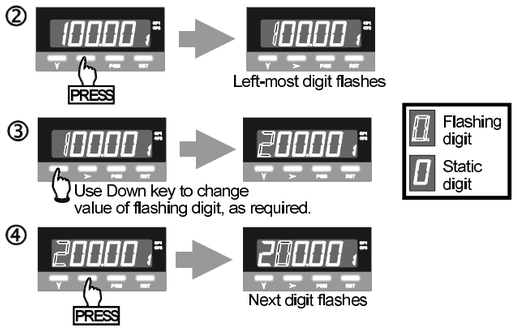

⑤ Repeat Steps 3 and 4 for each digit, as required.

⑥ Confirm new value or Abort Edit operation.

Program Mode Parameter Sequence

Primary Display	Identifier	Description	Adjustment Range
rt Lo SEE NOTE 1	rt Lo	Re-transmission Scale Minimum: The lower end of the linear scale for the re-transmission output, expressed as the value corresponding to the minimum output signal.	-19999 to 99999
rt Hi SEE NOTE 1	rt Hi	Re-transmission Scale Maximum: The upper end of the linear scale for the re-transmission output, expressed as the value corresponding to the maximum output signal.	-19999 to 99999
oFF	oFF	Process Variable Offset: Corrects a known offset of the input in order to display more accurately the process value.	-19999 to 99999
FiLt	FiLt	Input Filter Time Constant: Filters the input over a user-defineable time period to minimise the effect on the process variable of any extraneous impulses	0.0 (OFF) to 100.0
Addr SEE NOTE 1	Addr	Communications Address: The unique serial communications address of the instrument.	1 to 99
bAud SEE NOTE 1	bAud	Baud Rate: Serial communications speed	1200, 2400, 4800 or 9600
Color	Color	Display Colour Change: Defines the colour of the primary and secondary displays prior to/after the preset value (e.g. Alarm level) is reached.	rEd Red GrEEn Green Gn_rd Green to Red rd_Gn Red to Green
LocP	LocP	Alarm Lock: Enables/disables the changing of alarm values via the front panel.	En Enabled diS Disabled
HELP	HELP	Help Prompt: Determines whether the Primary Display shows the parameter description for 3 seconds before a parameter value is shown.	HLP Y Yes HLP n No

NOTE 1: Only appears if relevant option fitted and configured.

SERIAL COMMUNICATIONS

For information on the serial communications option, consult your supplier.

INSTALLATION

⚠ All installation work should be performed only by personnel who are technically competent and authorised to do so. Local Regulations regarding electrical installation & safety must be observed.

Panel-Mounting

The mounting panel must be rigid and may be up to 6mm (0.25 inches) thick. The cut-out required for the Indicator is shown on the right. Several Indicators may be mounted side-by-side in a multiple installation for which the cut-out width (for n Indicators) is (96n - 4) millimetres. The panel-mounting procedure is shown below.

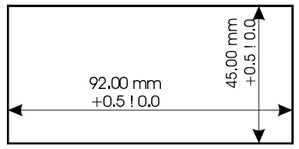

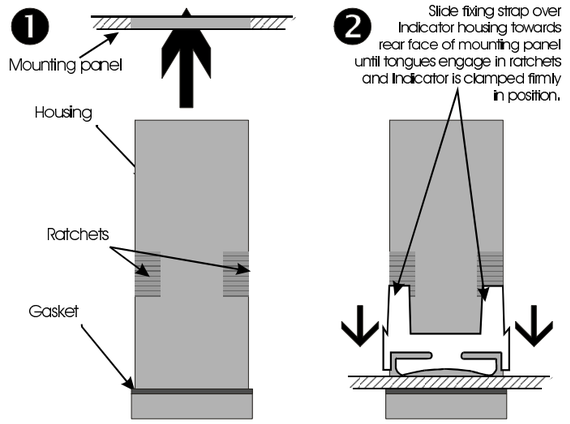

Rear Terminals

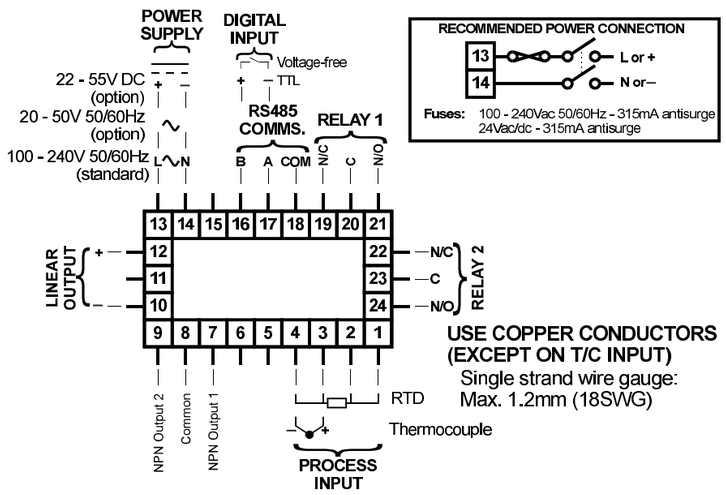

Relay 1: Standard; used as Alarm 1 output.

Relay 2: Optional; used as Alarm 2 output.

Linear output: Optional; provides a 10-bit re-transmission output (process variable).

Digital Input: Optional; used for the Security Facility. The terminals may be connected to (a) voltage-free contacts of an external switch, or (b) a TTL-compatible voltage. Operation is:

Voltage-free	TTL-compatible	Security Facility Status
Contacts open	Signal >2.0V	Entry into Program Mode prohibited
Contacts closed	Signal <0.8V	Entry into Program Mode permitted

Linear (Re-transmitted) Output Range

Range	Link Jumper Fitted
0 - 10V	LJ8
0 - 20mA	LJ9
0 - 5V	LJ8
4 - 20mA	LJ9

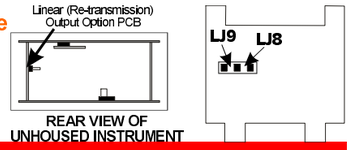

CONFIGURATION MODE

Entry/Exit

Indicator initially in Operation Mode

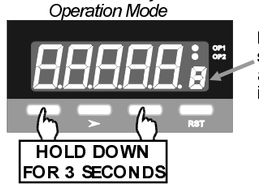

NOTE: In Configuration Mode, the secondary display flashes continuously and shows a single-character which identifies the displayed parameter.

Use the same key actions to return to Operation Mode.

Parameter Selection and Editing

As previously described (see **PROGRAM MODE**).

Configuration Mode Parameter Sequence

Primary Display	Identifier	Description	Adjustment Range
InPut	I	Input Range: Selects the input sensor type, resolution and display scale (°C or °F) by means of a code number.	See table below.
rnGhi	H	Range Trim High: Adjusts the maximum range value of the input type selected.	Range Trim Low to Range Max. (see table below).
rnGLo	L	Range Trim Low: Adjusts the minimum range value of the input type selected.	Range Min. (see table below) to Range Trim High.
Fr.EQ	F	Power Supply Frequency: applicable to DC-powered units only, this must be set to the mains (line) frequency for the site in order to ensure proper filtering of the input signal.	50 50Hz 60 60Hz
AL 1	1	Alarm 1 Type: defines the action of Alarm 1	P_Hi Process High P_Lo Process Low nonE No alarm
AL 2	2	Alarm 2 Type: defines the action of Alarm 2	P_Hi Process High P_Lo Process Low nonE No alarm
Out 1	U	Output 1 Usage: Determines how NPN Output 1 and relay Output 1 operate.	A1nd Alarm 1 non-latching, direct action A1nr Alarm 1 non-latching, reverse action A1Ld Alarm 1, latching direct action A1Lr Alarm 1, latching reverse action O12d Logical OR Alarms 1 & 2, direct action O12r Logical OR Alarms 1 & 2, reverse action
Out 2	u	Output 2 Usage: Determines how NPN Output 2 and relay Output 2 operate.	A2_d Alarm 2,direct action A2_r Alarm 2, reverse action O12d Logical OR Alarms 1 & 2, direct action O12r Logical OR Alarms 1 & 2, reverse action
rt En	t	Re-transmission (Linear) Output: selects the output range. See also **Selection of Linear (Re-transmission) Output Range** previously.	nonE None 0-5u 0 - 5V 1-5u 1 - 5V 0-10u 0 - 10V 2-10u 2 - 10V 0-20A 0 - 20mA 4-20A 4 - 20mA

Primary Display	Identifier	Description	Adjustment Range
OPtn	O	Option Selection: determines the option fitted and the function of that option.	nonE None CoMMS Serial Communications SEcY Digital Input - Security Facility

Input Range Codes

Thermocouple Inputs				RTD Inputs			
Input Type	Range Code	Range Min.	Range Max.	Input Type	Range Code	Range Min.	Range Max.
J	100 (°C)	-200	1200	3-wire	800 (°C)	-200	800
	101 (°F)	-328	2192		801 (°F)	-328	1472
	110 (°C)	-128.0	537.0		810 (°C)	-128.0	537.0
	111 (°F)	-198.4	998.6		811 (°F)	-198.4	998.6
T	200 (°C)	-240	400	4-wire	900 (°C)	-200	800
	201 (°F)	-400	752		901 (°F)	-328	1472
	210 (°C)	-128.0	400.0		910 (°C)	-128.0	537.0
	211 (°F)	-198.4	752.0		911 (°F)	-198.4	998.6
K	300 (°C)	-240	1372				
	301 (°F)	-400	2502				
	310 (°C)	-128.0	537.0				
	311 (°F)	-198.4	998.6				
N	400 (°C)	0	1399				
	401 (°F)	32	2550				
B	500 (°C)	100	1824				
	501 (°F)	212	3315				
R	600 (°C)	0	1760				
	601 (°F)	32	3200				
S	700 (°C)	0	1760				
	701 (°F)	32	3200				

The input range can be trimmed using the **rnGhi** and **rnGLo** parameters (see Parameter Sequence) - minimum span = 100°C.

SPECIFICATION

DISPLAY

Type: Red/green, 7-segment LED, 5-digit primary display, 1-digit secondary display.
Height: 18mm (0.71in) primary display, 7mm (0.3in) secondary display..

SENSOR INPUT

Types: Thermocouple (Types B, J, K, N, R, S and T) or RTD (3-wire or 4-wire).
Accuracy: 0.1% of span (CJC error 0.3% typical, 0.5% max.)
Sample Rate: Every 250mS.
Resolution: 14 bits.
Sensor Break Detection: Detected within two seconds. All alarms become active.
Input Impedance: Greater than 100MΩ resistive

DIGITAL INPUT (OPTION)

Voltage-Free Operation: Max. Contact Resistance (Closure) = 50Ω
Min. Contact Resistance (Open) = 5000Ω
TTL-Compatible Operation: Max. Voltage for "0" = 0.8V; Min. Voltage for "0" = –0.6V
Min. Voltage for "1" = 2.0V; Max. Voltage for "1" = 24.0V

TRANSISTOR OUTPUTS

Type: NPN open collector. Output 1 tied to Alarm 1, Output 2 tied to Alarm 2.

RELAY 1 OUTPUT (STANDARD) AND RELAY 2 OUTPUT (OPTION)

Contact Type/Rating: Single pole double throw. 5A resistive @ 120V AC; 3A resistive @ 240V AC.
Lifetime: >500,000 operations at rated voltage/current. Isolation - inherent.

LINEAR (RE-TRANSMITTED PV) OUTPUT (OPTION)

Accuracy: ±0.5% max.
Resolution: 8 bits in 250mS (10 bits in 1 second typically).
Update Rate: 4/second approximately.
Load Impedance: mA ranges - 500Ω max. V ranges - 500Ω min.

OPERATING CONDITIONS FOR INDOOR USE

Ambient Temperature (Operating): 0°C to 55°C
Ambient Temperature (Storage): –20°C to 80°C
Relative Humidity: 20% - 95% non-condensing
Supply Voltage: 100 - 240V AC 50/60Hz (standard) 7.5VA
20 - 50V AC (option) 7.5VA; 22 - 55V DC (option) 5W

ENVIRONMENTAL.

Approvals: CE, UL, ULC
EMC: Certified to EN 61326
NOTES:
1. For RF electromagnetic fields (10V/m 80% AM 1kHz), the reading accuracy may be impaired by up to 3°C in the frequency band 273 to 470MHz and by up to 1.4°C in the frequency band 785 to 1000MHz.
Safety Considerations: Complies with EN61010-1
Front Panel Sealing: To IP66

PHYSICAL

Dimensions: Height - 48mm, Width - 96mm, Depth - 100mm (behind panel)
Weight: 0.21kg max.