6100+, 8100+ & 4100+
Temperature & Process Controllers



- **Jumperless Configuration**
- **Auto Detected Hardware**
- **Process & Loop Alarms**
- **Modbus & ASCII Comms**
- **Auto or Manual Tuning**
- **Heat/Cool Operation**
- **Ramping Setpoint**
- **Remote/Dual Setpoint Options**
- **Available in 1/16, 1/8 & 1/4 DIN Formats**

With their improved interface, technical functionality and field flexibility, the West 6100+, 8100+ and 4100+ give you the best in comprehensive control for most temperature and process control loops.

Specification

Features

Control Types	Full PID with Pre-tune, Self-tune, manual tuning, or On-Off control. Heat only or heat & cool
Auto/Manual	Selectable from front panel or via digital input, with bumpless transfer
Output Configuration	Up to 3 possible, for control, alarm, 24VDC transmitter power supply or retransmit of process value or setpoint
Alarm 1 & 2 Types	Process high, process low, SP deviation, band, logical OR / AND. Also 1 loop alarm for process control security. Process alarms have adjustable hysteresis.
Human Interface	4 button operation, dual 4 digit 10mm & 8mm high (6100+, 8100+) and 13mm & 10mm high (4100+) LED displays, optional choice of colours (Red/Red, Red/Green, Green/Red or Green/Green), plus 5 LED indicators
PC Configuration	Off-line configuration from PC serial port to dedicated config socket (comms option not required). Configuration Software for Windows 98 or higher. West Part Number: PS1-CON

Input

Thermocouple	J, K, C, R, S, T, B, L, N & PtRh20%vsPtRh40%.
RTD	3 Wire PT100, 50Ω per lead maximum (balanced)
DC Linear	0 to 20mA, 4 to 20mA, 0 to 50mV, 10 to 50mV, 0 to 5V, 1 to 5V, 0 to 10V, 2 to 10V. Scaleable -1999 to 9999, with adjustable decimal point
Impedance	>10MΩ for Thermocouple and mV ranges, 47KΩ for V ranges and 5Ω for mA ranges
Accuracy	±0.1% of input range ±1 LSD (T/C CJC better than 1°C)
Sampling	4 per second, 14 bit resolution approximately
Sensor Break Detection	<2 seconds (except zero based DC ranges), control O/P's turn off, high alarms activate for T/C and mV ranges, low alarms activate for RTD, mA or V ranges

Outputs & Operations

Control & Alarm Relays	Contacts SPDT 2 Amp resistive at 240V AC, >500,000 operations
Control SSR Driver Outputs	Drive capability >10V DC in 500Ω minimum
Triac Outputs	0.01 to 1 Amp AC, 20 to 280Vrms, 47 to 63Hz
DC Linear Outputs	0 to 20mA, 4 to 20mA into 500Ω max, 0 to 10V, 2 to 10V, 0 to 5V into 500Ω min. Control outputs have 2% over/under drive applied. Accuracy ±0.25% at 250Ω (degrades linearly to 0.5% for increasing burden to specified limits)
Transmitter Power Supply	Output 24VDC (nominal) into 910Ω minimum to power external devices
Communications	2 Wire RS485, 1200 to 19200 Baud, Modbus and ASCII protocol (selectable)
Digital Input	Selects between 2 setpoints or Auto/Manual control. Volt free or TTL input
Remote Setpoint Input	0 to 20mA, 4 to 20mA, 0 to 5V, 1 to 5V, 0 to 10V or 2 to 10V. Scaleable -1999 to 9999. Local/Remote setpoint selected from front panel

DS-Px100-2-US-1707
© West Control Solutions 2009

Operating & Environmental

Temperature & RH	0 to 55°C (-20 to 80°C storage), 20% to 95% RH non-condensing
Power Supply	100 to 240V 50/60Hz 7.5VA (optional 20 to 48V AC 7.5VA/22 to 65V DC 5 watts)
Front Panel Protection	IEC IP66 (Behind panel protection is IP20), NEMA4X
Standards	CE, UL & ULC recognised

Dimensions

6100+

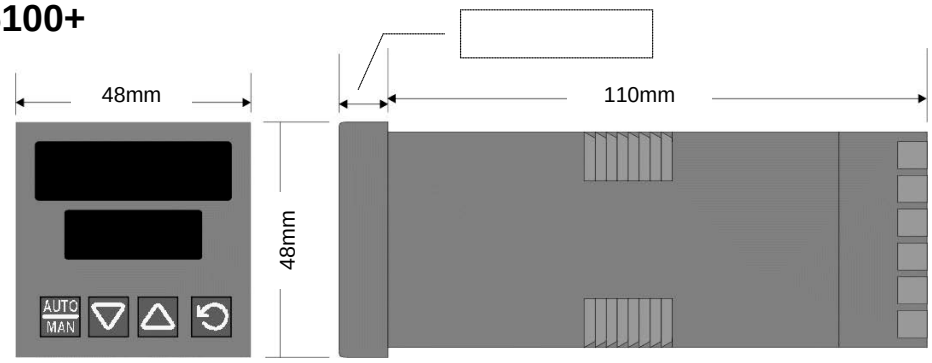

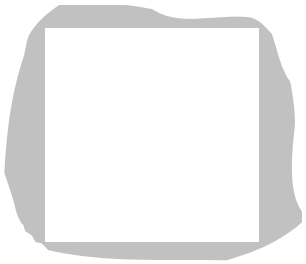

8100+

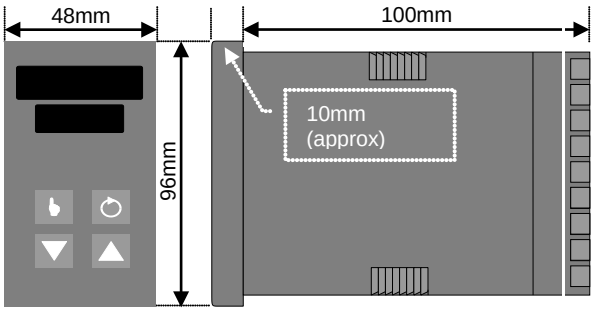

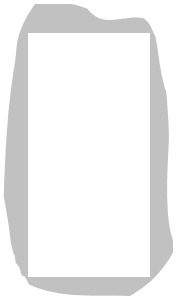

4100+

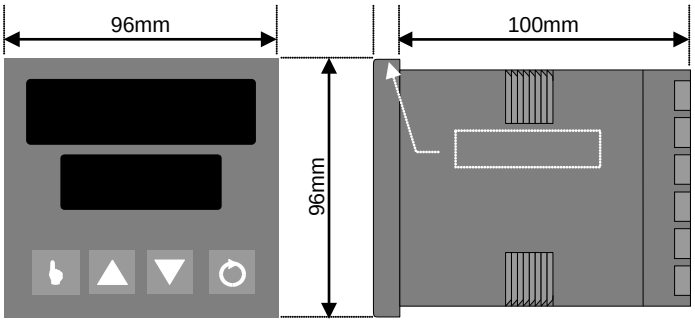

Cut out

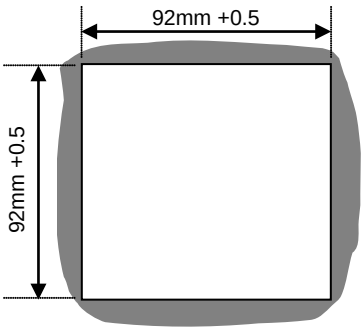

© West Control Solutions 2009

Wiring Connections

6100+

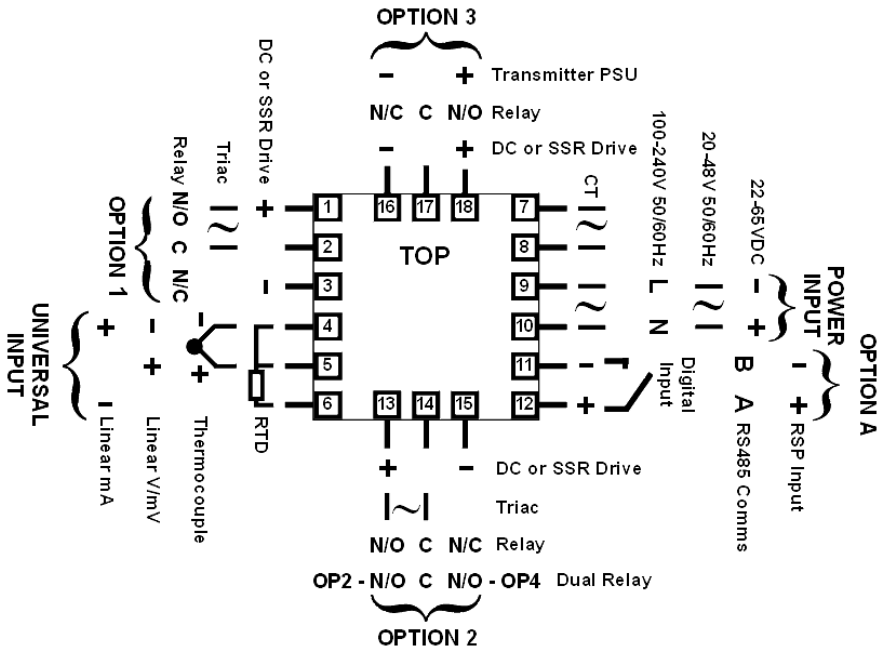

Field Reconfiguration

Input
Jumper-free configuration for any type
(no extra parts required)

Option Slot 1	Part Number
Relay Output	PO1-C10
Linear mA/V DC Output	PO1-C21
SSR Driver Output	PO1-C50
Triac Output	PO1-C80
Option Slot 2	**Part Number**
Relay Output	PO2-C10
Linear mA/V DC Output	PO2-C21
SSR Driver Output	PO2-C50
Triac Output	PO2-C80
Dual Relay Output	PO2-W09
Option Slot 3	**Part Number**
Relay Output	PO2-C10
Linear mA/V DC Output	PO2-C21
SSR Driver Output	PO2-C50
24VDC Transmitter PSU	PO2-W08
Option Slot A	**Part Number**
Digital Input	PA1-W03
Auxiliary Input (Basic)	PA1-W04
RS485 Comms	PA1-W06

8100+/4100+

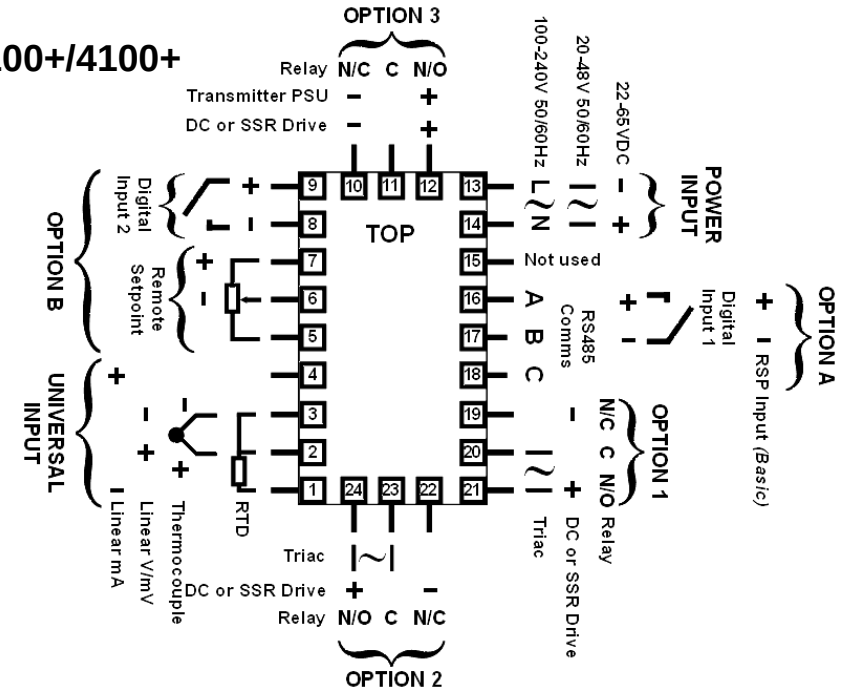

Field Reconfiguration

Input
Jumper-free configuration for any type
(no extra parts required)

Option Slot 1	Part Number
Relay Output	PO1-C10
Linear mA/V DC Output	PO1-C21
SSR Driver Output	PO1-C50
Triac Output	PO1-C80
Option Slot 2	**Part Number**
Relay Output	PO2-C10
Linear mA/V DC Output	PO2-C21
SSR Driver Output	PO2-C50
Triac Output	PO2-C80
Dual Relay Output	PO2-W09
Option Slot 3	**Part Number**
Relay Output	PO2-C10
Linear mA/V DC Output	PO2-C21
SSR Driver Output	PO2-C50
24VDC Transmitter PSU	PO2-W08
Dual Relay Output	PO2-W09
Option Slot A	**Part Number**
Digital Input	PA1-W03
Auxiliary Input (Basic)	PA1-W04
RS485 Comms	PA1-W06
Option Slot B	**Part Number**
Auxiliary Input (Full)	PB1-W0R

© West Control Solutions 2009

Ordering Code



Model	
1/16 DIN Controller	6101
1/8 DIN Controller	8101
1/4 DIN Controller	4101

Input Type	
Universal input (TC, RTD, mA, V)	2

Option Slot 1	
Not fitted	0
Relay	1
DC for SSR	2
DC 4-20mA	7
Triac	8

Option Slot 2	
Not fitted	0
Relay	1
DC Driver for SSR	2
DC 4-20mA	7
Triac	8

Option Slot B (not on 6101)	
0	Not fitted
R	Remote Setpoint Input *(Full)*

Display Color	
0	Red Upper & Lower
1	Green Upper & Lower
2	Red Upper, Green Lower
3	Green Upper, Red Lower

Power Supply	
0	100-240V AC
2	24-48V AC or DC

Option Slot A	
0	Not fitted
1	RS485 Communications
3	Digital Input
4	Remote Setpoint Input *(Basic)*

Option Slot 3	
0	Not fitted
1	Relay
2	DC Driver for SSR
7	DC 4-20mA
8	Transmitter Power Supply

West Control Solutions – International Sales and Support

CHINA
Danaher Setra-ICG (Tianjin Co., Ltd.
No.28 Wei 5 Road,
The Micro-Electronic Industry Park TEDA,
Xiqing District, Tianjin 300385
Tel: +86 22 8398 8098 Fax: +86 22 8398 8099
Sales Hotline: 400 666 1802
e-mail: tc.sales@danaher.com

GERMANY
PMA Prozeß- und, Maschinen- Automation GmbH,
Miramstraße 8, 7D -34123 Kassel
Tel: +49 (561) 505-1307 Fax: +49 (561) 505-1710
e-mail: mailbox@pma-online.de

USA
West Control Solutions
1675 Delany Road, Gurnee, IL 60031-1282
Tel: 800 866 6659 Fax: 847 782 5223
e-mail: custserv.west@dancon.com

FRANCE
Hengstler SA, 69 Rue de la Belle Etoile
Bat D - ZI Paris Nord II, 95700, Roissy
Tel: +33 (1) 77 80 90 40 Fax:+33 (1) 77 80 90 50
e-mail: info@westinstruments.com

UNITED KINGDOM
West Control Solutions
The Hyde Business Park, Brighton, East Sussex, BN2 4JU
Tel: +44 (0)1273 606271 Fax: +44 (0)1273 609990
e-mail: info@westinstruments.com

Brochures and datasheets are available for the complete range of West Control Solutions products, contact your local sales office or visit our website at: **www.west-cs.com** for more information.

Specifications are subject to change without notice, as a result of continual development and improvement, E&OE

© West Control Solutions 2009